Part # SCBS4-12

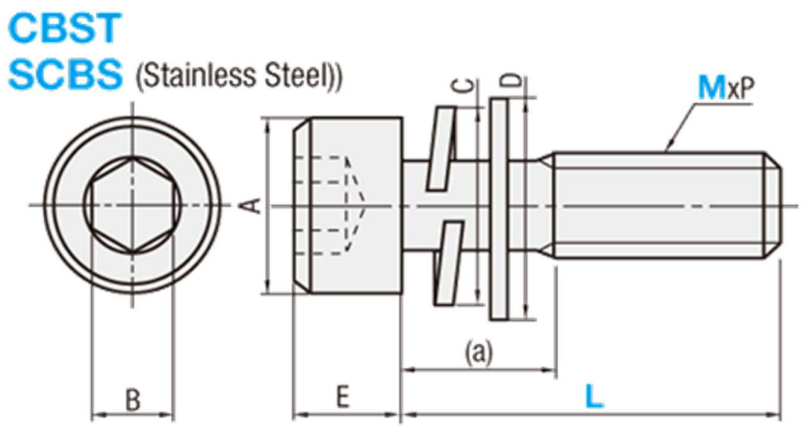

MxP	A	E	B	C	D	(a)
4x0.7	7	4	3	7	9	4.4

[!](a) is the max length (reference) between

SCBS

Screws	**[M] Material: SUS304 Equivalent *Strength Class: A2-70 JIS 0209 (6g)**
Washers	**Spring Washers JIS B1251 Flat Washers JIS B 1256**
[S]Surface Treatment	**Barrel, Passivated**

Nominal of Thread (M)	4	**Length L (mm)**	12
Pitch(mm)	0.7	**Detailed Shape**	Standard
Mounting Hole Shape	[Hex Socket] Hex Socket	**Basic Shape**	[Standard (Round)] Standard (Round)
Material	[Stainless Steel] SUS304 Equivalent	**Surface Treatment**	Barrel, Passivated
Thread Type	Metric, Coarse	**Tip Shape**	Flat End
Additional Shape	With Captured Washer	**Sales Unit**	Low Quantity (Available beginning with 1 pc.)